Concurrent Piezo- and Photo-Plethysmography for Enhanced Signal Context

Authors: Christian L Petersen[1], Nancy Luo[1], J Mark Ansermino[1] and Guy A Dumont[2]

[1]Departments of Anesthesiology, Pharmacology & Therapeutic[1], and [2]Electrical and Computer Engineerin[2], The University of British Columbia, Vancouver, Canada

Introduction: The plethysmogram (PG), in old times measured by mechanical displacement, is now typically captured in a finger photoplethysmogram (PPG). The PPG is sensitive to motion artifacts, and an accelerometer on the sensor can be employed to estimate signal quality [1]. In this work we consider an alternative: Having a piezoelectric transducer mounted inside the sensor finger boot generate a concurrent mechanical PG that can be used to detect motion through correlation with the PPG.

Method: A brass disk with a ceramic piezoelectric coating, commonly used as a "buzzer" in consumer electronics, was mounted inside a regular PPG finger boot (Fig. 1a). The voltage generated from finger pulsatile blood engorgement was sent to an oscilloscope through a high input-impedance pre-amplifier and filter (Fig. 1b). The PPG sensor was connected to a standard pulse oximeter, and the timing of the oscilloscope scan was chosen to be comparable to the PPG waveform readout on the pulse oximeter.

Results: Simultaneous measurements were performed with the pulse oximeter and the oscilloscope. The readings from the mechanical sensor were more sensitive to vibrations than the optical readings, as expected. Under static conditions the output from the two sensors correlated well (Fig. 1c). It was feasible to obtain a strong signal from both sensor elements simultaneously. However, the positioning of the mechanical sensor is important, with the strongest signal appearing from the fingertip.

Conclusion: Our findings show that a piezoelectric transducer can register mechanical blood pulsations inside a typical PPG finger boot sensor, concurrently with the optical PPG measurements. This opens for a new regiment of measurements in which the coherence of the PG readouts carry signal quality information, and possibly even new physiological information. For example, the relative timing of the two waveforms could potentially be used to detect changes in peripheral blood pressure.

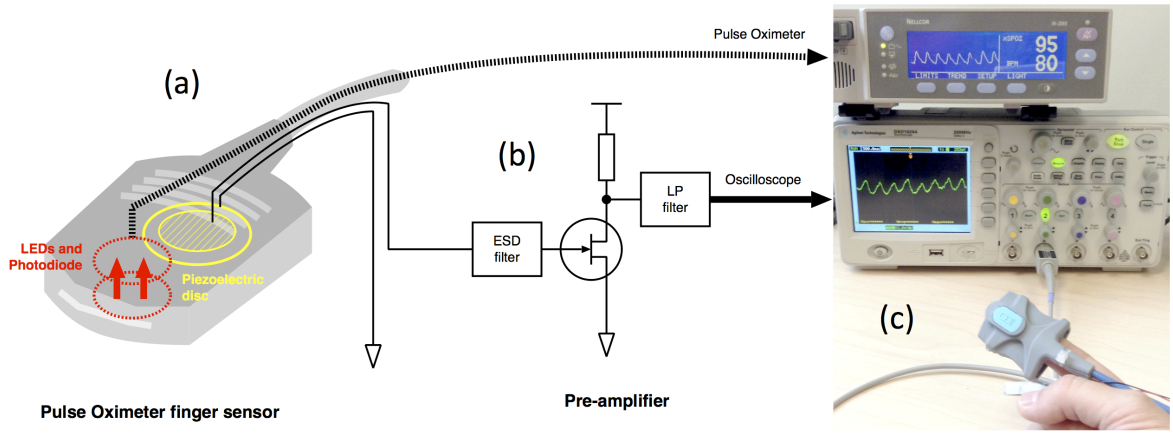

Fig. 1: Dual piezo- and photo-plethysmogram sensor (a), pre-amplifier (b), and picture of operation (c).

[1] Tamura T, Maeda Y, Sekine M, Yoshida M. Wearable Photoplethysmographic Sensors - Past and Present. Electronics 2014, 3, 282-302 (2014).